Centre No.						Paper Reference							Surname	Initial(s)
Candidate No.						6	6	7	8	/	0	1	Signature	

Paper Reference(s)

6678/01

Edexcel GCE

Mechanics M2

Advanced/Advanced Subsidiary

Friday 22 May 2009 – Morning

Time: 1 hour 30 minutes

Examiner's use only

Team Leader's use only

Question Number	Leave Blank
1	
2	
3	
4	
5	
6	
7	
8	
Total	

Materials required for examination

Mathematical Formulae (Orange or Green)

Items included with question papers

Nil

Candidates may use any calculator allowed by the regulations of the Joint Council for Qualifications. Calculators must not have the facility for symbolic algebra manipulation, differentiation and integration, or have retrievable mathematical formulae stored in them.

Instructions to Candidates

In the boxes above, write your centre number, candidate number, your surname, initials and signature.
Check that you have the correct question paper.
Answer ALL the questions.
You must write your answer to each question in the space following the question.
If you need more space to complete your answers to any question, use additional sheets.
Whenever a numerical value of g is required, take $g = 9.8$ m s^{-2}.
When a calculator is used, the answer should be given to an appropriate degree of accuracy.

Information for Candidates

A booklet 'Mathematical Formulae and Statistical Tables' is provided.
Full marks may be obtained for answers to ALL questions.
The marks for individual questions and the parts of questions are shown in round brackets: e.g. **(2)**.
There are 8 questions in this question paper. The total mark for this paper is 75.
There are 28 pages in this question paper. Any blank pages are indicated.

Advice to Candidates

You must ensure that your answers to parts of questions are clearly labelled.
You must show sufficient working to make your methods clear to the examiner.
Answers without working may not gain full credit.

This publication may be reproduced only in accordance with Edexcel Limited copyright policy.
©2009 Edexcel Limited.

Printer's Log. No.
N34274A
W850/R6678/57570 3/5/4/3

N 3 4 2 7 4 A 0 1 2 8

Turn over

edexcel
advancing learning, changing lives

https://xtremepape.rs/

Leave blank

1. A particle of mass 0.25 kg is moving with velocity $(3\mathbf{i} + 7\mathbf{j})$ m s^{-1} when it receives the impulse $(5\mathbf{i} - 3\mathbf{j})$ N s.

Find the speed of the particle immediately after the impulse.

(5)

N 3 4 2 7 4 A 0 2 2 8

https://xtremepape.rs/

Leave blank

Question 1 continued

Q1

(Total 5 marks)

N 3 4 2 7 4 A 0 3 2 8

Turn over

https://xtremepape.rs/

Leave blank

2. At time $t = 0$ a particle P leaves the origin O and moves along the x-axis. At time t seconds the velocity of P is v m s^{-1}, where

$$v = 8t - t^2 .$$

(a) Find the maximum value of v.

(4)

(b) Find the time taken for P to return to O.

(5)

N 3 4 2 7 4 A 0 4 2 8

https://xtremepape.rs/

Leave blank

Question 2 continued

Q2

(Total 9 marks)

N 3 4 2 7 4 A 0 5 2 8

Turn over

https://xtremepape.rs/

Leave blank

3. A truck of mass of 300 kg moves along a straight horizontal road with a constant speed of 10 m s^{-1}. The resistance to motion of the truck has magnitude 120 N.

(a) Find the rate at which the engine of the truck is working.

(2)

On another occasion the truck moves at a constant speed up a hill inclined at θ to the horizontal, where $\sin\theta = \frac{1}{14}$. The resistance to motion of the truck from non-gravitational forces remains of magnitude 120 N. The rate at which the engine works is the same as in part (a).

(b) Find the speed of the truck.

(4)

N 3 4 2 7 4 A 0 6 2 8

https://xtremepape.rs/

Leave blank

Question 3 continued

Q3

(Total 6 marks)

N 3 4 2 7 4 A 0 7 2 8

Turn over

https://xtremepape.rs/

Leave blank

4.

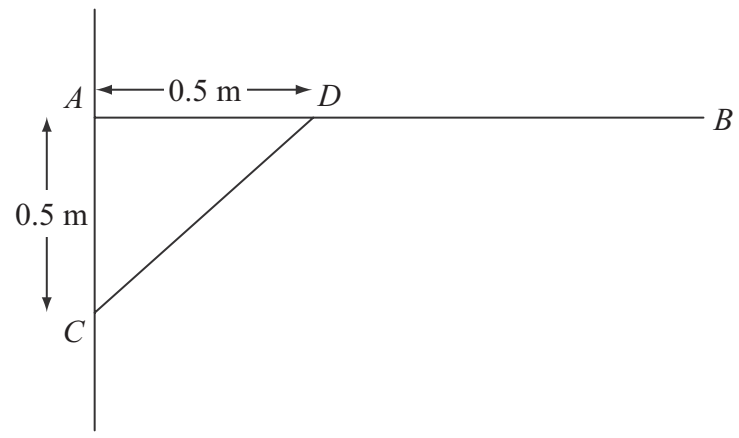

Figure 1

A uniform rod AB, of length 1.5 m and mass 3 kg, is smoothly hinged to a vertical wall at A. The rod is held in equilibrium in a horizontal position by a light strut CD as shown in Figure 1. The rod and the strut lie in the same vertical plane, which is perpendicular to the wall. The end C of the strut is freely jointed to the wall at a point 0.5 m vertically below A. The end D is freely joined to the rod so that AD is 0.5 m.

(a) Find the thrust in CD.

(4)

(b) Find the magnitude and direction of the force exerted on the rod AB at A.

(7)

N 3 4 2 7 4 A 0 8 2 8

https://xtremepape.rs/

Leave blank

Question 4 continued

https://xtremepape.rs/

Leave blank

Question 4 continued

N 3 4 2 7 4 A 0 1 0 2 8

https://xtremepape.rs/

Leave blank

Question 4 continued

(Total 11 marks)

Q4

N 3 4 2 7 4 A 0 1 1 2 8

Turn over

https://xtremepape.rs/

Leave blank

5.

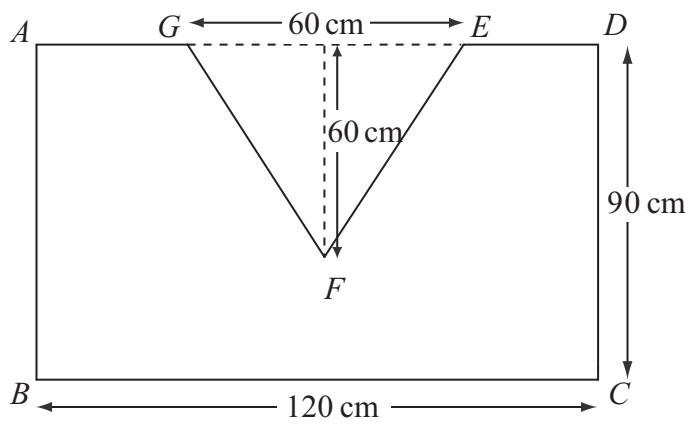

Figure 2

A shop sign *ABCDEFG* is modelled as a uniform lamina, as illustrated in Figure 2. *ABCD* is a rectangle with $BC = 120$ cm and $DC = 90$ cm. The shape *EFG* is an isosceles triangle with $EG = 60$ cm and height 60 cm. The mid-point of *AD* and the mid-point of *EG* coincide.

(a) Find the distance of the centre of mass of the sign from the side *AD*.

(5)

The sign is freely suspended from *A* and hangs at rest.

(b) Find the size of the angle between *AB* and the vertical.

(4)

N 3 4 2 7 4 A 0 1 2 2 8

https://xtremepape.rs/

Leave blank

Question 5 continued

https://xtremepape.rs/

Leave blank

Question 5 continued

N 3 4 2 7 4 A 0 1 4 2 8

https://xtremepape.rs/

Leave blank

Question 5 continued

Q5

(Total 9 marks)

N 3 4 2 7 4 A 0 1 5 2 8

Turn over

https://xtremepape.rs/

Leave blank

6.

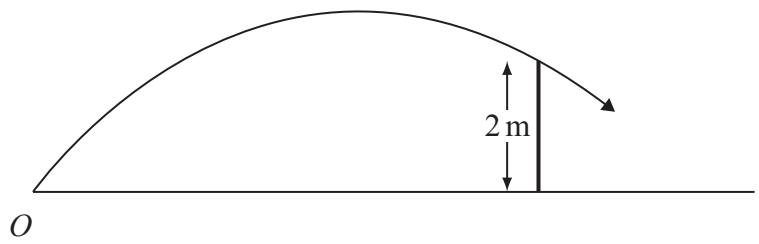

Figure 3

A child playing cricket on horizontal ground hits the ball towards a fence 10 m away. The ball moves in a vertical plane which is perpendicular to the fence. The ball just passes over the top of the fence, which is 2 m above the ground, as shown in Figure 3.

The ball is modelled as a particle projected with initial speed u m s^{-1} from point O on the ground at an angle α to the ground.

(a) By writing down expressions for the horizontal and vertical distances, from O of the ball t seconds after it was hit, show that

$$2 = 10\tan\alpha - \frac{50g}{u^2\cos^2\alpha}.$$

(6)

Given that $\alpha = 45°$,

(b) find the speed of the ball as it passes over the fence.

(6)

N 3 4 2 7 4 A 0 1 6 2 8

https://xtremepape.rs/

Leave blank

Question 6 continued

https://xtremepape.rs/

Leave blank

Question 6 continued

N 3 4 2 7 4 A 0 1 8 2 8

https://xtremepape.rs/

Leave blank

Question 6 continued

(Total 12 marks)

Q6

N 3 4 2 7 4 A 0 1 9 2 8

Turn over

https://xtremepape.rs/

Leave blank

7.

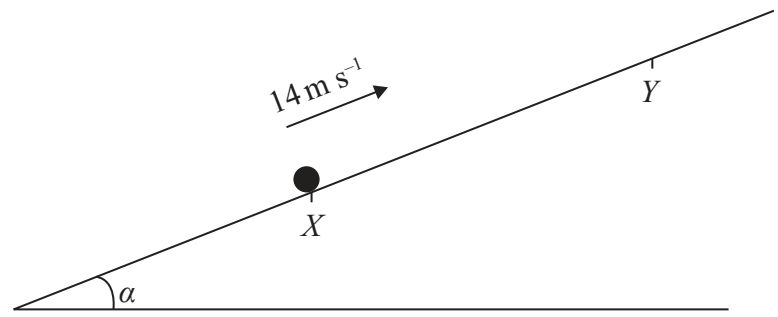

Figure 4

A particle P of mass 2 kg is projected up a rough plane with initial speed 14 m s^{-1}, from a point X on the plane, as shown in Figure 4. The particle moves up the plane along the line of greatest slope through X and comes to instantaneous rest at the point Y. The plane is inclined at an angle α to the horizontal, where $\tan \alpha = \frac{7}{24}$. The coefficient of friction between the particle and the plane is $\frac{1}{8}$.

(a) Use the work-energy principle to show that $XY = 25$ m.

(7)

After reaching Y, the particle P slides back down the plane.

(b) Find the speed of P as it passes through X.

(4)

N 3 4 2 7 4 A 0 2 0 2 8

https://xtremepape.rs/

Leave blank

Question 7 continued

https://xtremepape.rs/

Leave blank

Question 7 continued

https://xtremepape.rs/

Leave blank

Question 7 continued

(Total 11 marks)

Q7

N 3 4 2 7 4 A 0 2 3 2 8

Turn over

https://xtremepape.rs/

Leave blank

8. Particles A, B and C of masses $4m$, $3m$ and m respectively, lie at rest in a straight line on a smooth horizontal plane with B between A and C. Particles A and B are projected towards each other with speeds u m s^{-1} and v m s^{-1} respectively, and collide directly.

As a result of the collision, A is brought to rest and B rebounds with speed kv m s^{-1}. The coefficient of restitution between A and B is $\frac{3}{4}$.

(a) Show that $u = 3v$.

(6)

(b) Find the value of k.

(2)

Immediately after the collision between A and B, particle C is projected with speed $2v$ m s^{-1} towards B so that B and C collide directly.

(c) Show that there is no further collision between A and B.

(4)

N 3 4 2 7 4 A 0 2 4 2 8

https://xtremepape.rs/

Leave blank

Question 8 continued

https://xtremepape.rs/

Leave blank

Question 8 continued

N 3 4 2 7 4 A 0 2 6 2 8

https://xtremepape.rs/

Leave blank

Question 8 continued

https://xtremepape.rs/

Leave blank

Question 8 continued

Q8

(Total 12 marks)

TOTAL FOR PAPER: 75 MARKS

END

N 3 4 2 7 4 A 0 2 8 2 8

https://xtremepape.rs/